QUICKPLAY®

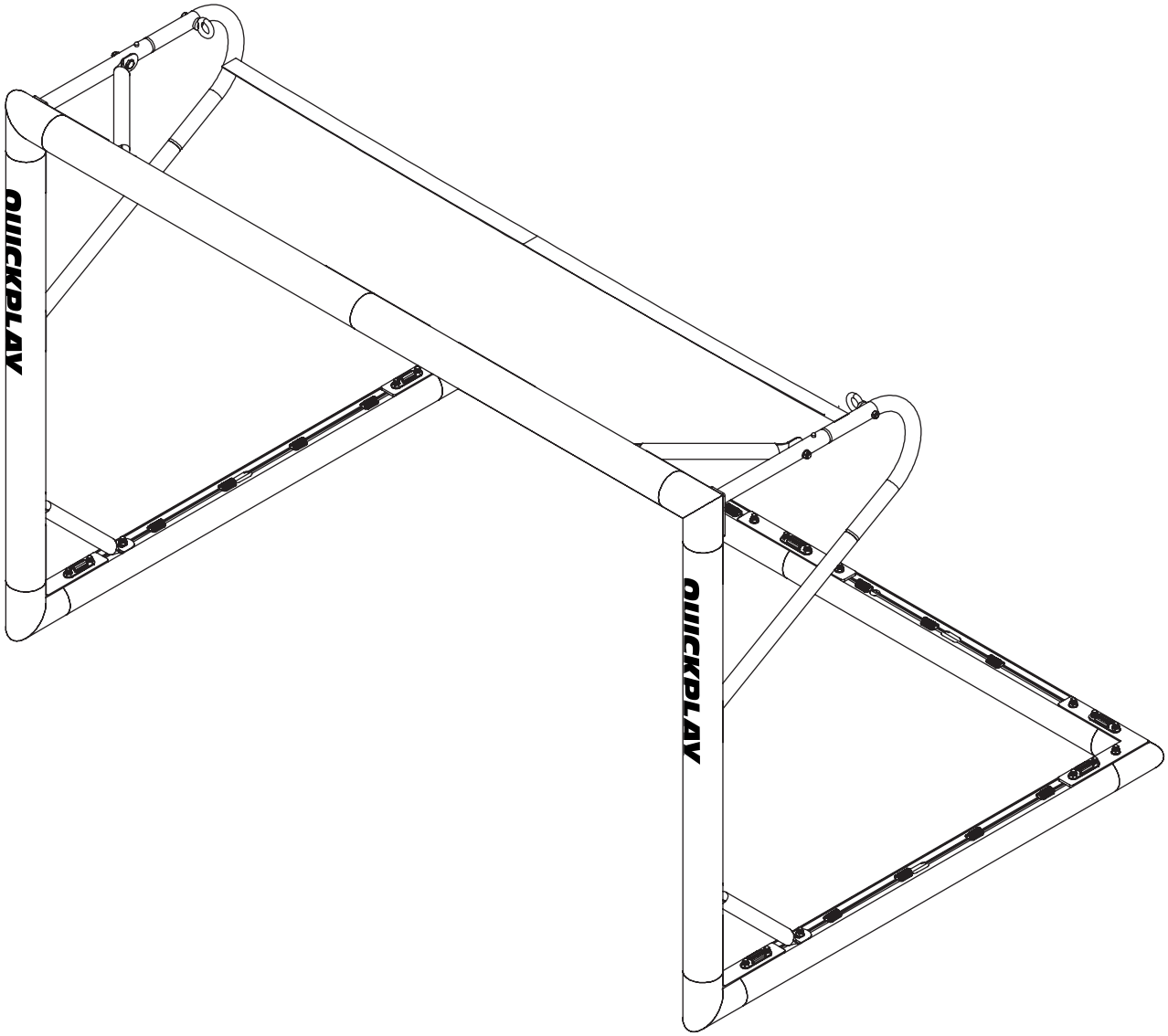

MATCH 80

9 x 4.5ft

SCAN FOR
SETUP VIDEO

PARTS LIST

80-A1
CROSSBAR AND BACK BAR (4x)

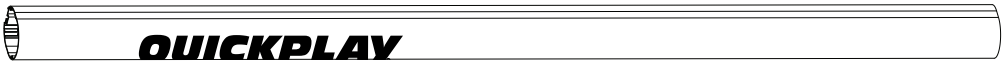

80-A3
UPRIGHTS (2x)

80-A4
BASE BAR SIDES (2x)

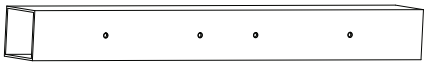

80-A7
CROSSBAR & BASE BAR INNER CONNECTOR (2x)

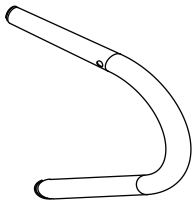

80-A8
STANCHION CORNER (2x)

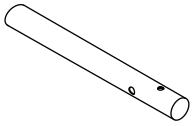

80-A9
STANCHION DIAGONAL (2x)

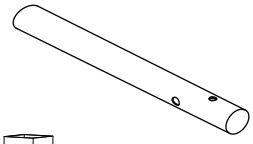

80-A10
STANCHION TOP (2x)

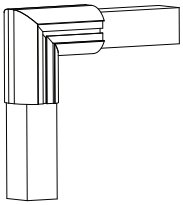

80-A5
CROSSBAR & BASE BAR CORNER (4x)

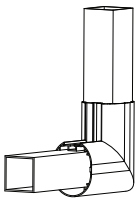

80-A6
CROSSBAR & BASE CONNECTOR (2x)

80-A11
STANCHION BRACE (2x)

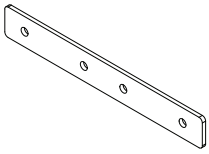

80-S1
STRAIGHT FLAT CONNECTOR (2x)

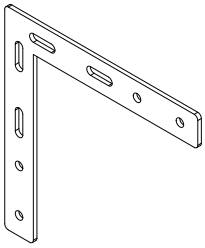

80-S2
CORNER FLAT CONNECTOR (4x)

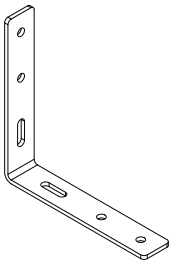

80-S3
CORNER 90° CONNECTOR (2x)

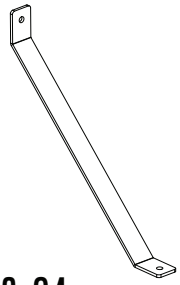

80-S4
CORNER ANGLED CONNECTOR (2x)

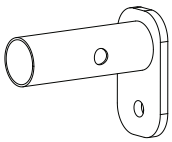

80-S5
STRAIGHT SOCKET (2x)

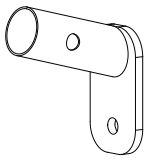

80-S6
ANGLED SOCKET (2x)

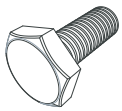

A1
M10x20 (42x)

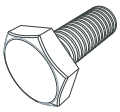

A3
M10x25 (2x)

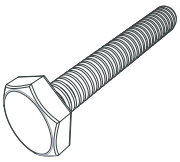

B1
M8x55 (2x)

C1
M8x15 (8x)

NW-1
10MM NYLON WASHER (44x)

NW-2
8MM NYLON WASHER (2x)

A2
M10 (44x)

B2
M8 (2x)

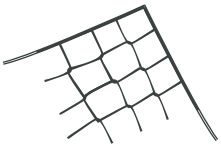

NET
(1x)

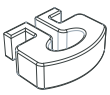

NC-1
NET CLIPS (20x)

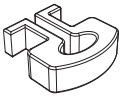

NC-2
LONG NET CLIPS (16x)

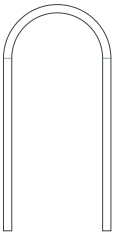

GP-1
GROUND PEGS (4x)

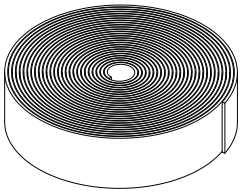

WEB-1
NET RETAINER (1x)

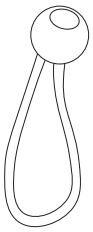

BUN-1
BUNGEES (2x)

TOOLS SUPPLIED

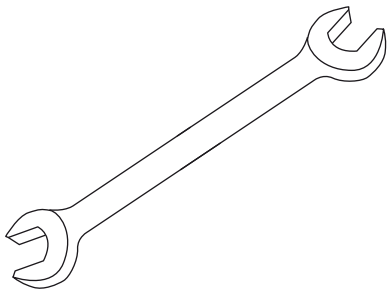

LARGE WRENCH

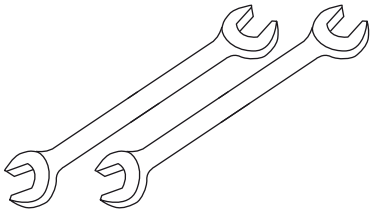

SMALL WRENCH (2x)

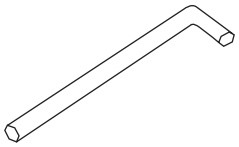

ALLEN KEY

WARNING INFORMATION

1. Read through the instruction manual thoroughly before assembling the goal.
2. Check parts for any defects prior to the assembly of the goal.
3. Only use the goal on a flat surface.
4. Ensure due diligence is carried out and a risk assessment followed prior to the assembly of the goal.
5. Safety/warning stickers must be visible at all times.
6. Goals must be anchored at all times.
7. Never climb on the net or the posts.
8. Ensure the goal is checked for any signs of damage prior to use.
9. Use extreme caution when moving the goal.
10. Remove nets when goals are not in use.

1 Year Manufacturer Warranty:
Register your 2 yr warranty within 15 days of purchase
visit: Warranty.QuickPlaySport.com or scan this code:
What your warranty covers?
Replacement parts within two years of your purchase date.
In accordance to the warranty guidelines above, failure to follow the methods of disassemble, use and storage will void your two year manufacturer warranty.
Warranty exclusions
- Accidental damage
- Misuse and abuse of product
- Lost merchandise
- Failure to properly care for your product

This excludes products which are clearly marketed as all weather products which are designed to be left outside assembled. Please read the website description for further details.
Should you wish to make a warranty claim please contact customer service with the required details. Please provide the following:
1. Order number
2. Name and full address details
3. Pictures of the fault with a brief description of the problem

Customer service details:
support@quickplaysport.com

Reference this page to ensure your frame's parts are in the correct place

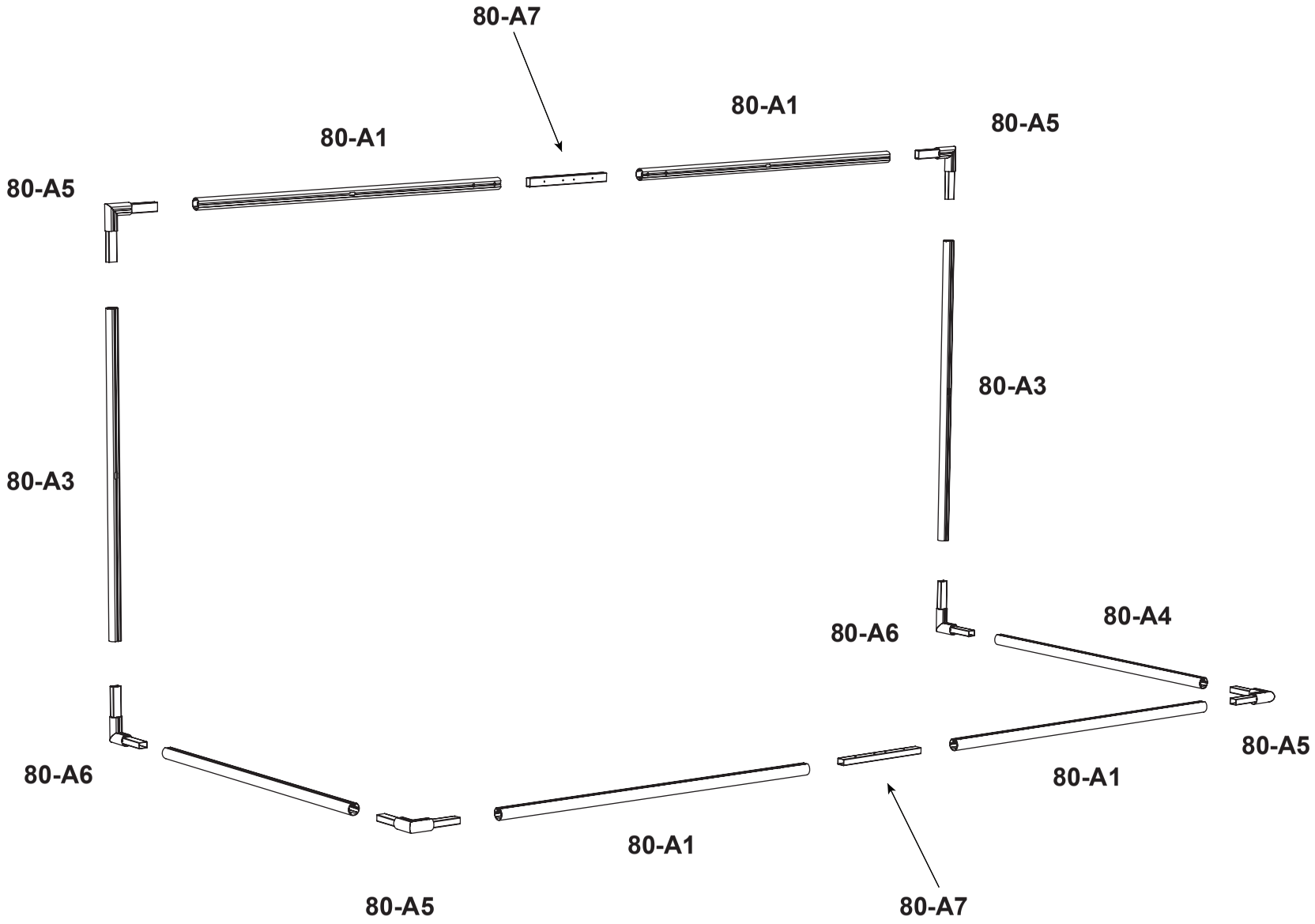

STEP 01 -
Lay the crossbar (80-A1), posts (80-A3), base bar (80-A1) corners (80-A5, 80-A6) and inner connector parts (80-A7) on the ground as the diagram shows.

STEP 02.1 -
Slide 2x A1 bolts into the end of both 80-A1.

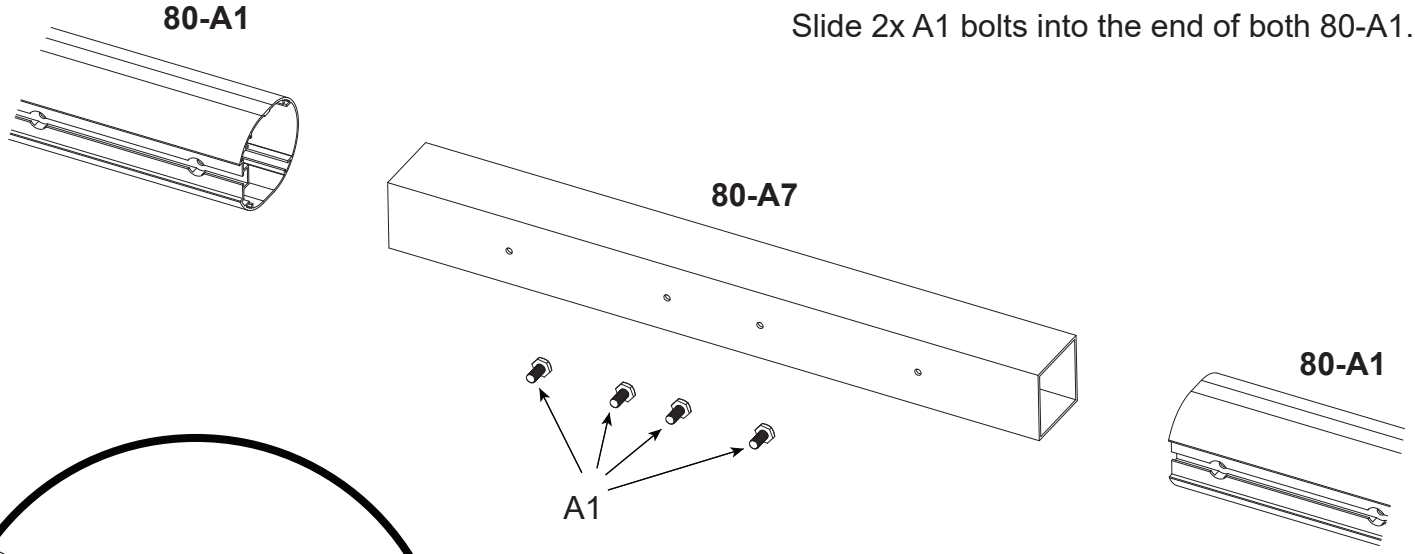

STEP 02.2 -
Ensure the bolts are positioned as shown.

Close 2 sets of 80-A1 together, with 80-A7 stored inside

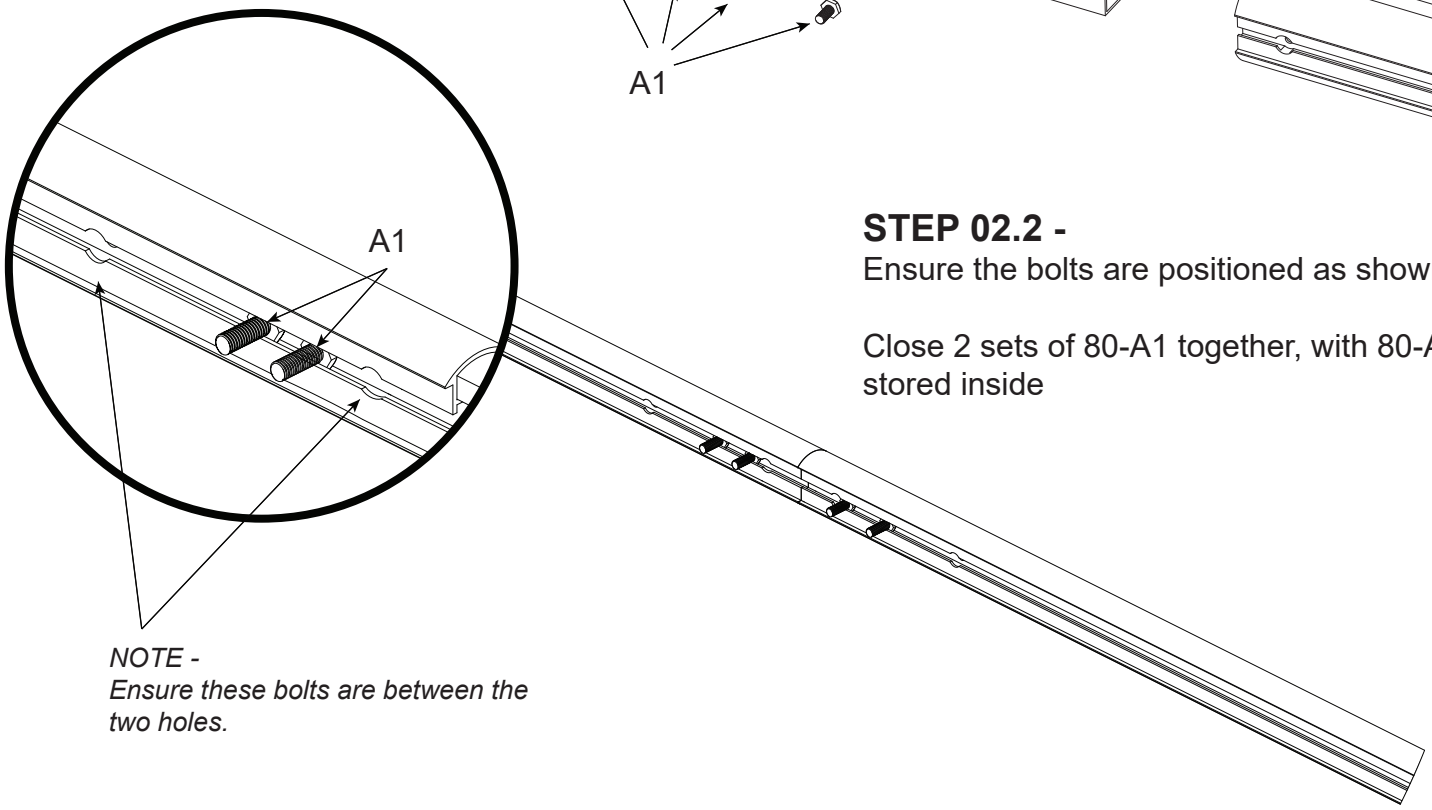

NOTE -
Ensure these bolts are between the two holes.

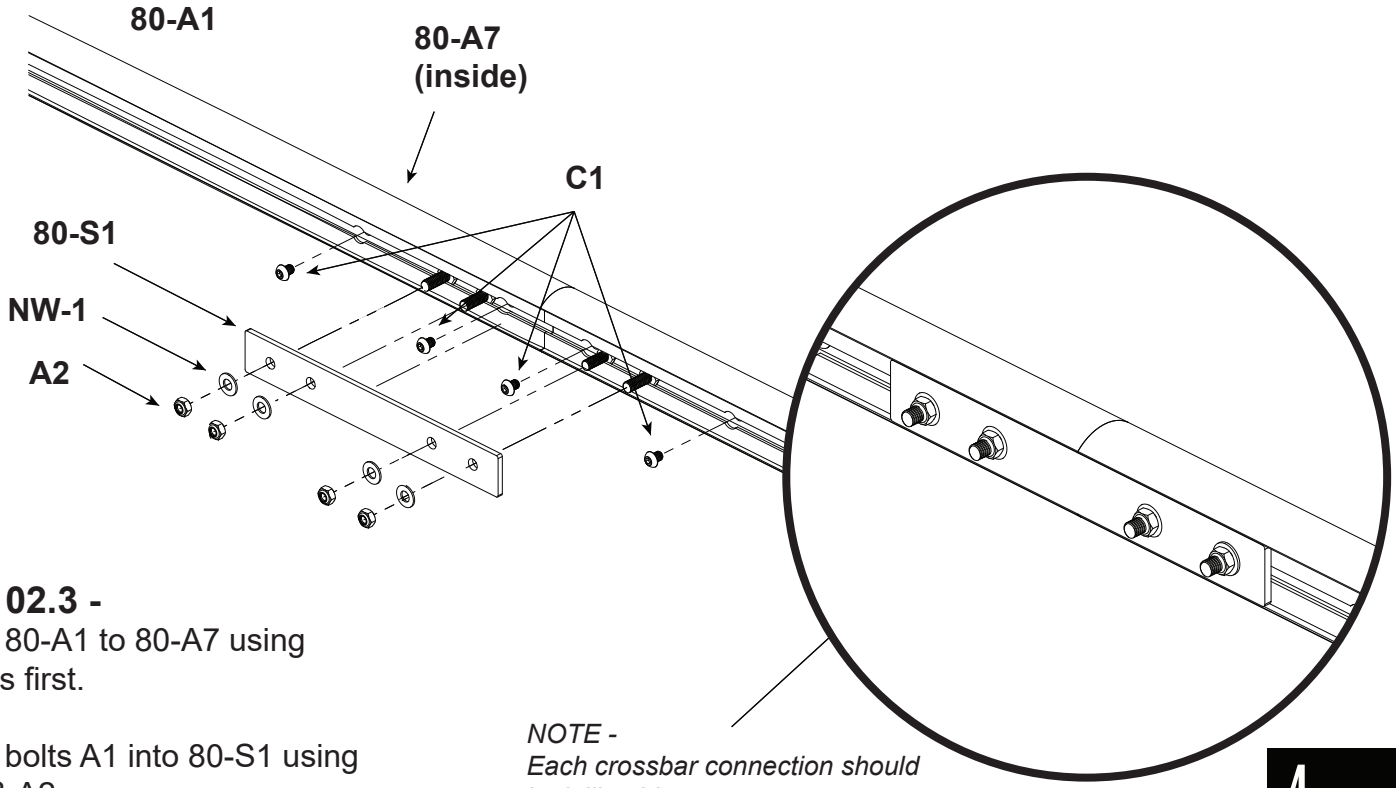

STEP 02.3 -
Fasten 80-A1 to 80-A7 using C1 bolts first.

Fasten bolts A1 into 80-S1 using NW-1 & A2

NOTE -
Each crossbar connection should look like this

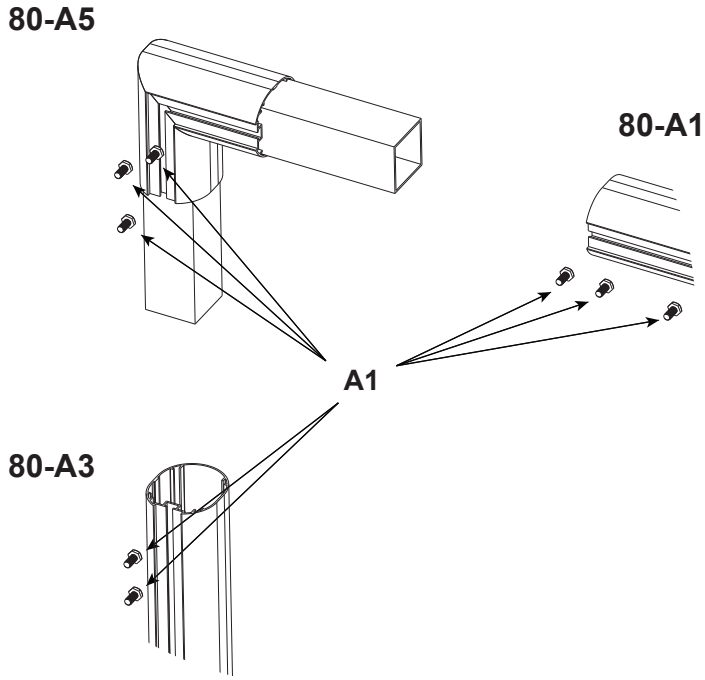

STEP 03.1 -

Slide 3x A1 bolts into the end of 80-A1

Slide 3x A1 bolts into the end of 80-A5.

For goalposts - Slide 2x A1 bolts into the end of 80-A3.

For base bar - Slide 2x A1 bolts into the end of 80-A3.

STEP 03.2 -

Ensure the bolts are positioned as shown.

For crossbar and goalposts - Close 80-A1, 80-A3 & 80-A5 together.

For base bar - Close 80-A1, 80-A3 & 80-A5 together.

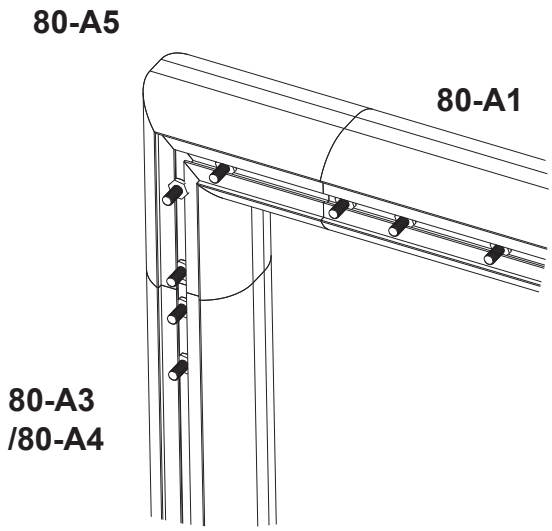

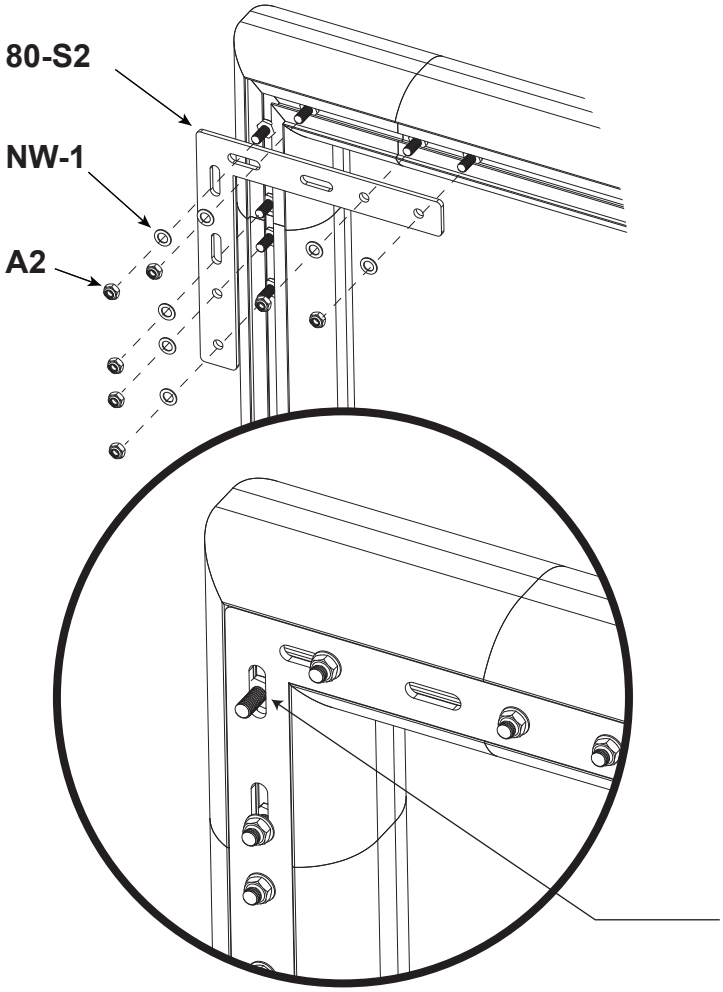

STEP 03.3 -

For the goal posts & crossbar - fasten 80-A1, **80-A3** & 80-A5 together using 80-S2

For the base bars - fasten 80-A1, **80-A4** & 80-A5 together using 80-S2

Fasten bolts A1 into 80-S2 using 8x NW-1 & 8x A2

Do not attach NW-1 or A2 to this A1 bolt on all corners at this point

THE CROSSBAR & POSTS SHOULD NOW BE ASSEMBLED AS SHOULD THE BASE BAR. THESE ASSEMBLED PARTS NEED TO BE CONNECTED TOGETHER.

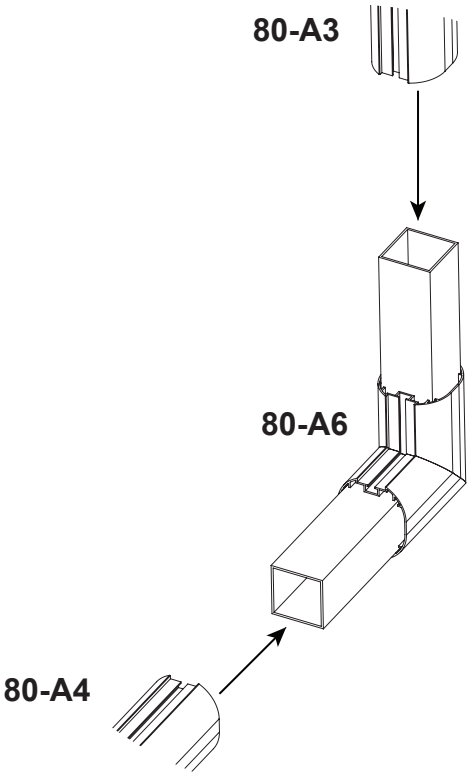

STEP 04.1 -

With the base bar assembly laid on the ground, slot 80-A6 into the two ends of the base bar assembly

Then lift the goal post assembly upright and slot onto the other end of 80-A6

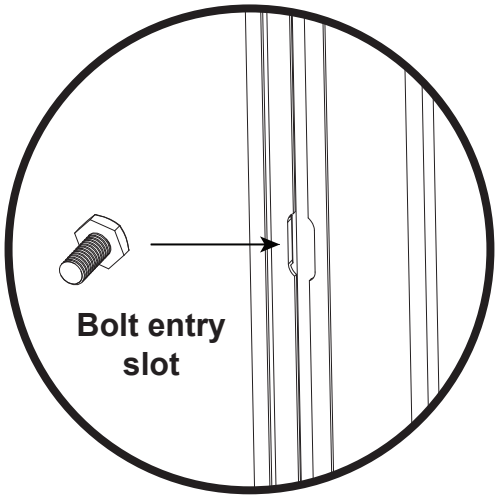

STEP 04.2 -

Slide 3x A1 into the bolt entry slot of 80-A3 & 3x A1 into the bolt entry slot of 80-A4

Secure 80-A3, 80-A4 & 80-A6 together using 80-S3 & 80-S4

Fasten bolts A1 into S3 & S4 using 6x NW-1 & 6x A2

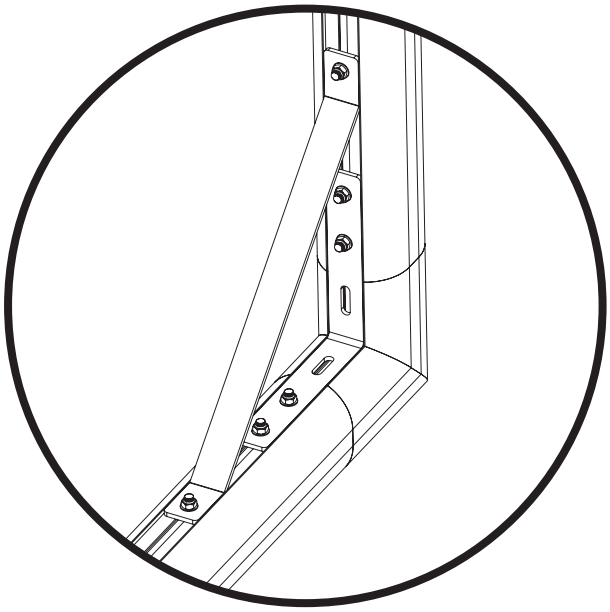

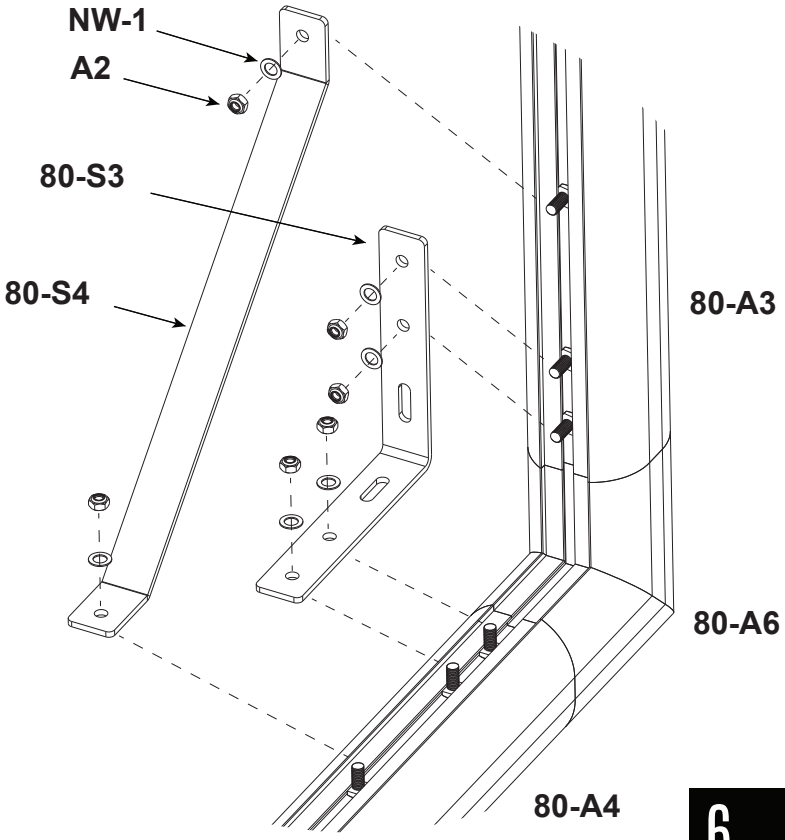

STEP 05.1 -

LOOSELY fasten 80-S5 to the TOP CORNERS of the goal frame, using the unused A3 bolt (shown on page 5), NW-1 & A2

LOOSELY fasten 80-S6 three quaters the way up the post below 80-S5 of the goal frame, using the unused A3 bolt (shown on page 5), NW-1 & A2

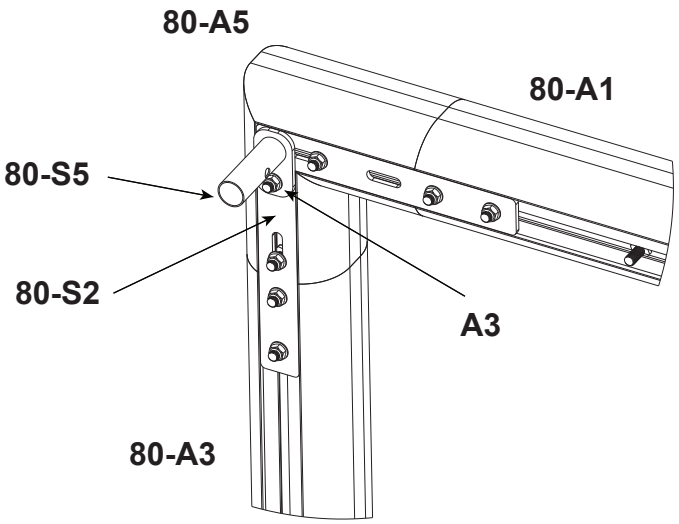

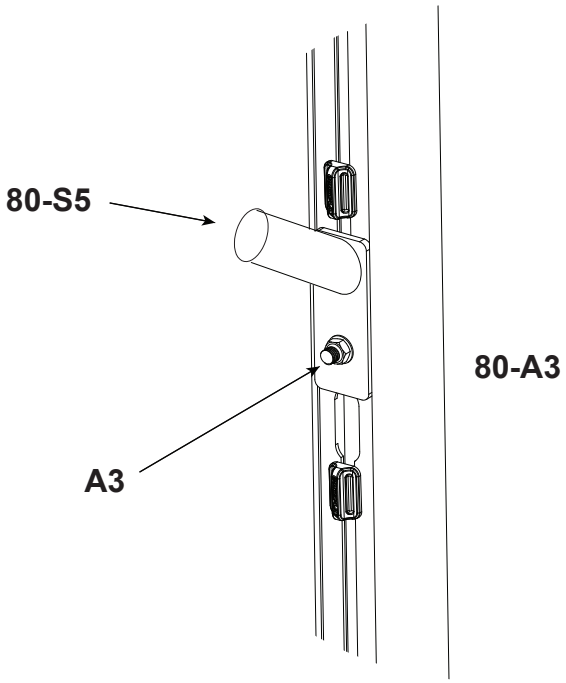

STEP 05.2 -

LOOSELY connect 80-A10, 80-A8 & 80-A9 together. Connect 80-A7 onto 80-S5 & 80-A9 onto 80-S6.

Connect 80-A11 to 80-A8 using B1, NW-2 & B2. Connect 80-A11 to 80-A1 using A1, NW-1 & A2.

Fully tighten all LOOSELY CONNECTED bolts once the stanchions are fully assembled onto the frame.

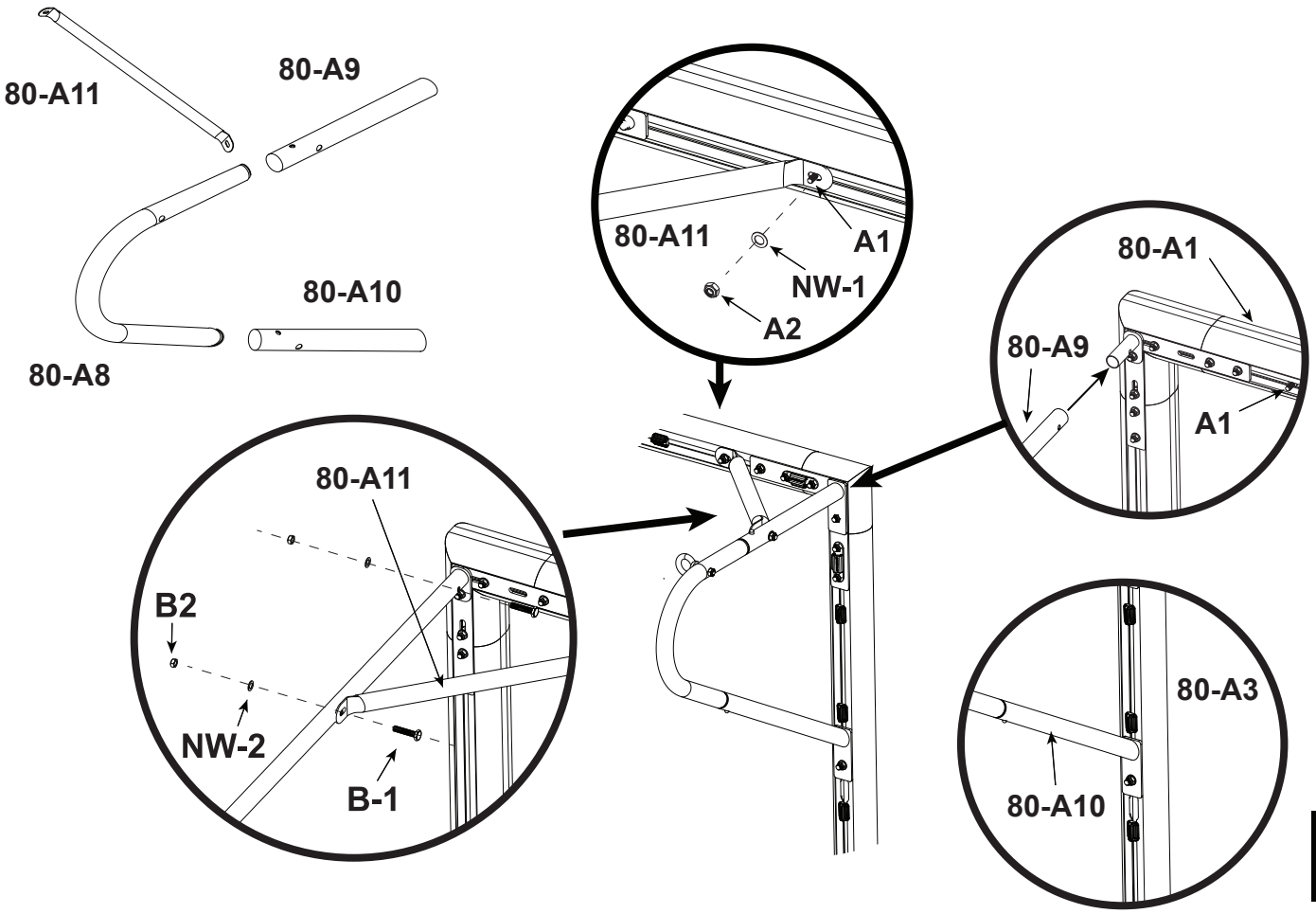

THE GOAL FRAME SHOULD NOW BE FULLY ASSEMBLED & ALL FASTENERS FULLY TIGHTENED

STEP 06.1 -

Feed BUN-1 through one end of WEB-1
& secure it around the top of the stanchions,
shown below

Do the same to the other end of WEB-1

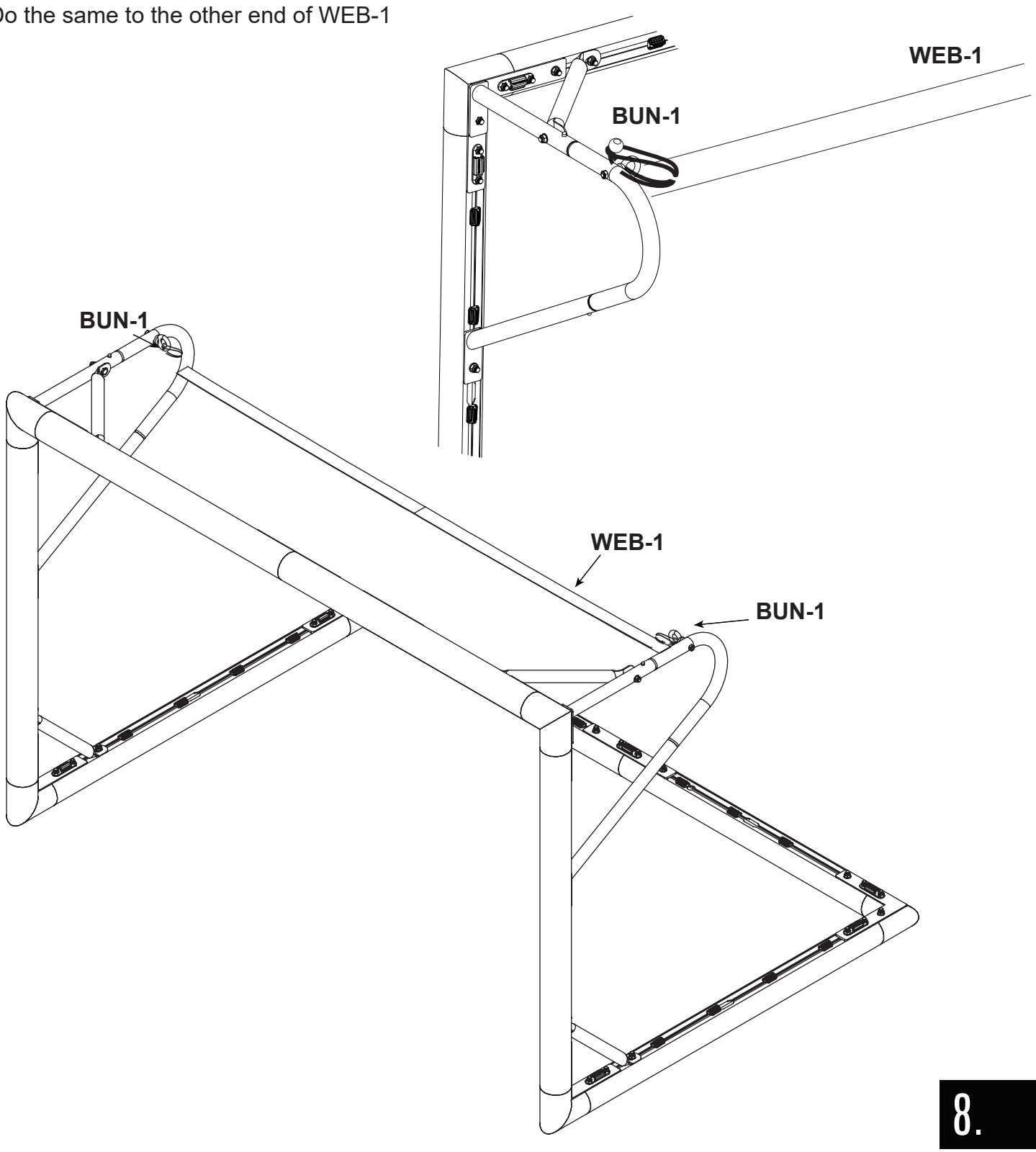

STEP 07.1 -

Identify the ‘TOP CORNER’ tags on the net.

Throw the net over the assembled goal frame ensuring the TOP CORNER tags are positioned in the top corners of the frame

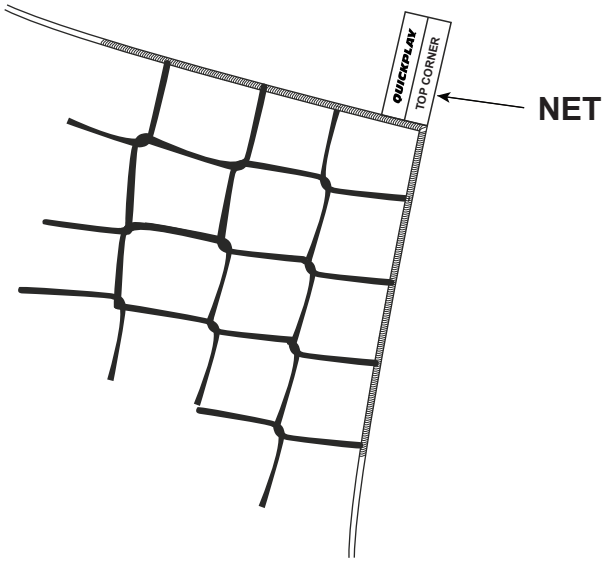

NC-1

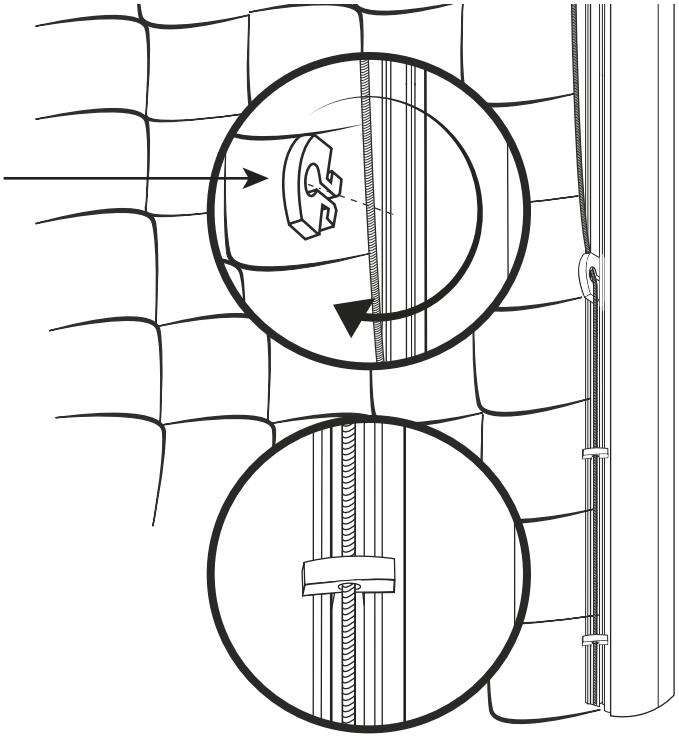

STEP 07.2 -

Insert the thick perimeter trim of the net into the mouth of the net clips.

Secure the net to the rear of the assembled frame using NC-1.

Use NC-2 when securing the net into the corner brackets (80-S2 & 80-S3).

Push & twist the net clips into the frame as shown in the diagram to the left.

ASSEMBLY COMPLETE

THANK YOU!

For choosing the QUICKPLAY MATCH 80 SOCCER GOAL.

We hope you enjoy and get
years of use out of this product.

If you have any issues, please do not
return it to the store. instead, contact us
directly:

support@quickplaysport.com

We promise to resolve it
or your money back.

At QUICKPLAY we think sport is all about taking part.
We develop innovative products that help athletes and
coaches at all levels of sport, perform to the best
of their ability.

If you have any queries or suggestions about how we can
improve our products, we'd love to hear them. Please feel
free to get in touch.

© 2024 QUICKPLAY Sport Limited. All Rights Reserved.
Designed in the UK and USA. Made in China to EU
standards.