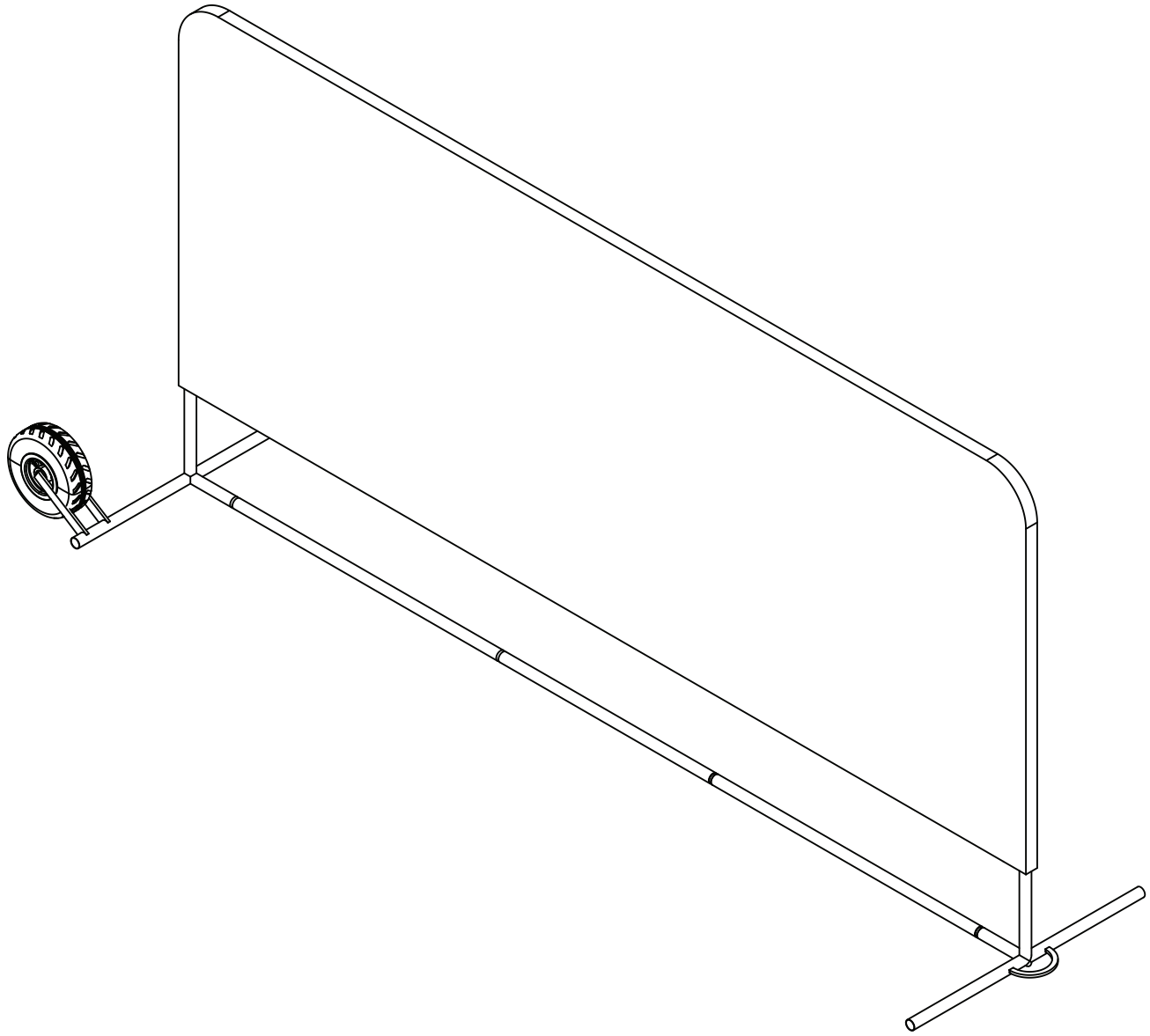

GOALKEEPER DEFLECTION CART COVER

9.5 x 5.2FT

SCAN FOR
SETUP VIDEO

STEP 01 -
Slide the cover around and over the top of the frame. Ensure you pull the cover down on both sides until it fits snug.

There should be a slight gap from the bottom of the cover to the floor to allow balls to go underneath.

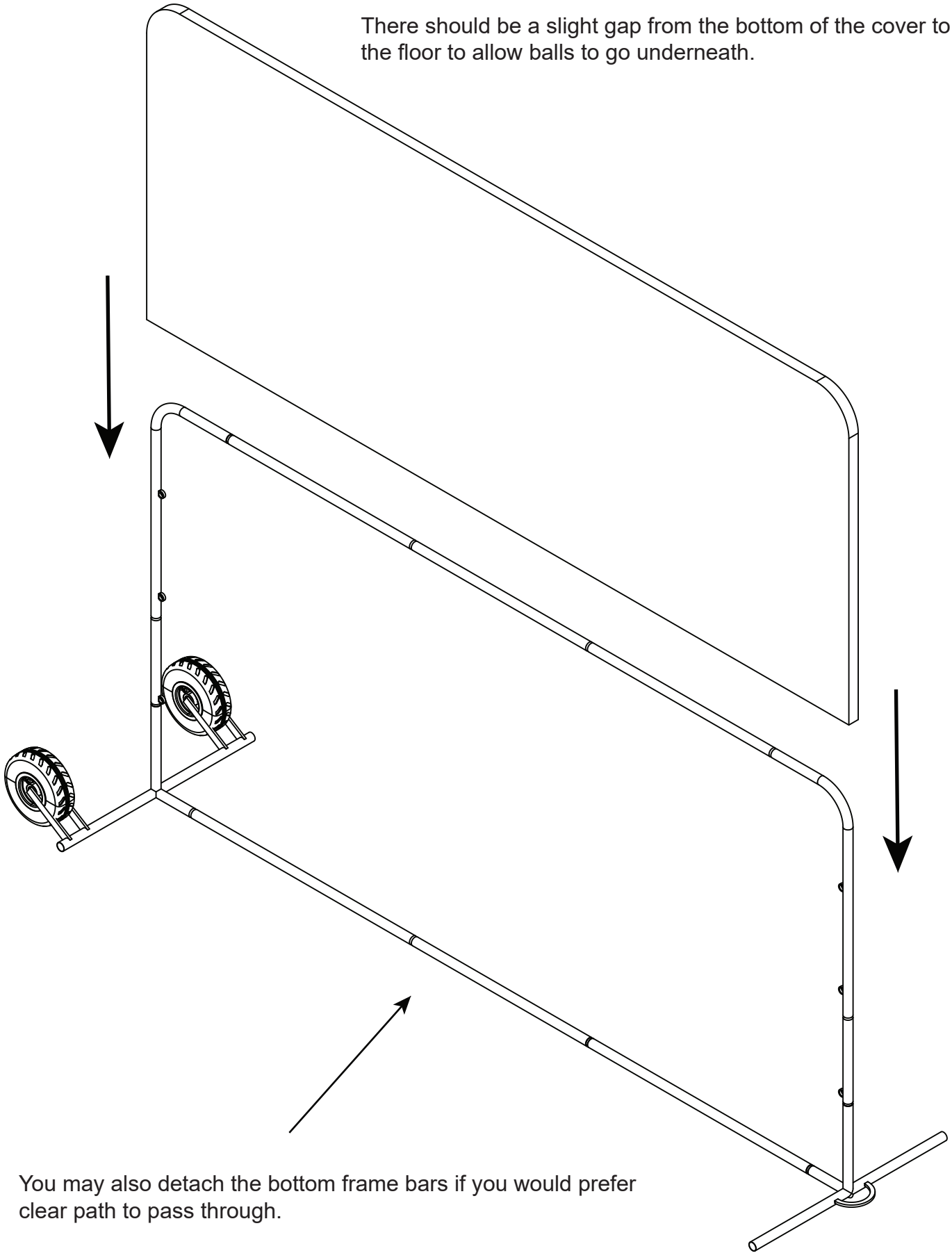

You may also detach the bottom frame bars if you would prefer clear path to pass through.

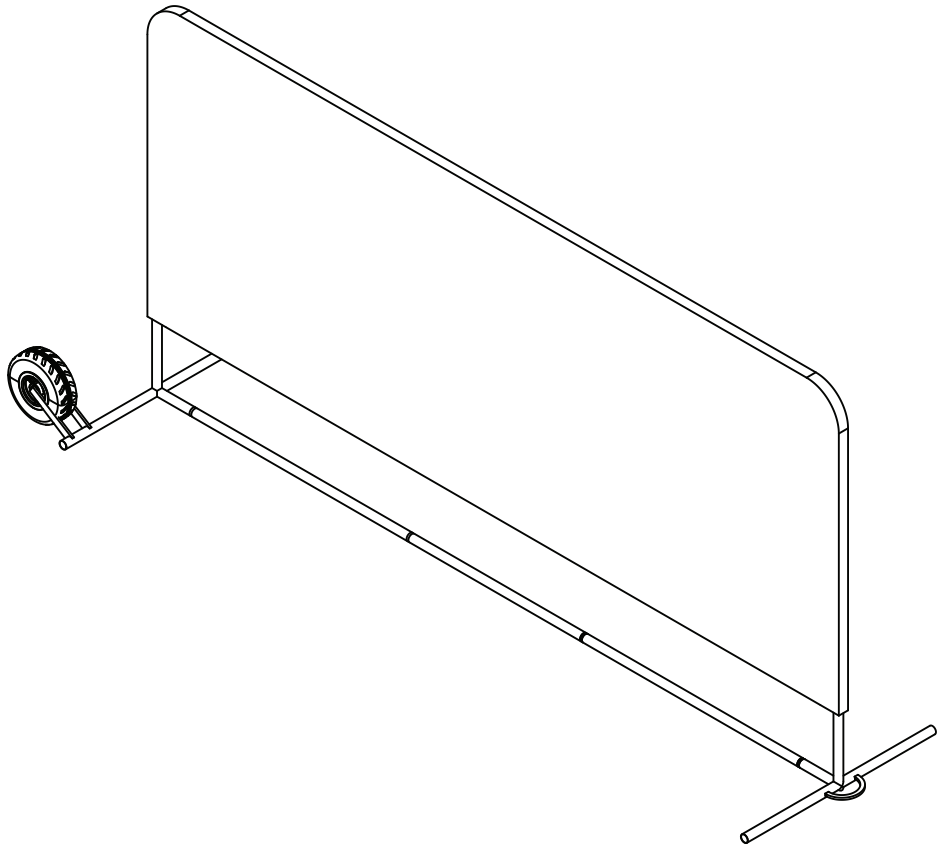

WARNING INFORMATION

1. Read through the instruction manual thoroughly before assembling the product.
2. Check parts for any defects prior to attaching cover to the frame.
3. Only use on a flat surface.
4. Ensure due diligence is carried out and a risk assessment followed prior to the assembly of the cover.
5. Never climb on the cover.
6. Ensure the cover is checked for any signs of damage prior to use.
7. Use extreme caution when moving the frame and cover.
8. Remove cover when product is not in use.

1 Year Manufacturer Warranty:
Register your 2 yr warranty within 15 days of purchase
visit: Warranty.QuickPlaySport.com or scan this code:
What your warranty covers?
Replacement parts within two years of your purchase date.
In accordance to the warranty guidelines above, failure to follow the methods of disassemble, use and storage will void your two year manufacturer warranty.
Warranty exclusions
- Accidental damage
- Misuse and abuse of product
- Lost merchandise
- Failure to properly care for your product

This excludes products which are clearly marketed as all weather products which are designed to be left outside assembled. Please read the website description for further details.
Should you wish to make a warranty claim please contact customer service with the required details. Please provide the following:
1. Order number
2. Name and full address details
3. Pictures of the fault with a brief description of the problem

Customer service details:
support@quickplaysport.com

THANK YOU!

For choosing the QUICKPLAY GOALKEEPING DEFLECTION CART COVER.

We hope you enjoy and get years of use out of this product.

If you have any issues, please do not return it to the store. instead, contact us directly:

support@quickplaysport.com

We promise to resolve it
or your money back.

At QUICKPLAY we think sport is all about taking part. We develop innovative products that help athletes and coaches at all levels of sport, perform to the best of their ability. If you have any queries or suggestions about how we can improve our products, we'd love to hear them. Please feel free to get in touch.

© 2024 QUICKPLAY Sport Limited. All Rights Reserved. Designed in the UK and USA. Made in China to EU standards.

@quickplay_sport / @quickplay_soccer
www.quickplaysport.com / www.quickplaysport.us
Customer service: support@quickplaysport.com